| Engineering Release Notice (ERN) | Location | Change description | A=Added D=Deleted | W=Was |
|---|---|---|---|---|
| | | | | |

Document release status: RELEASED
Date | Modification count


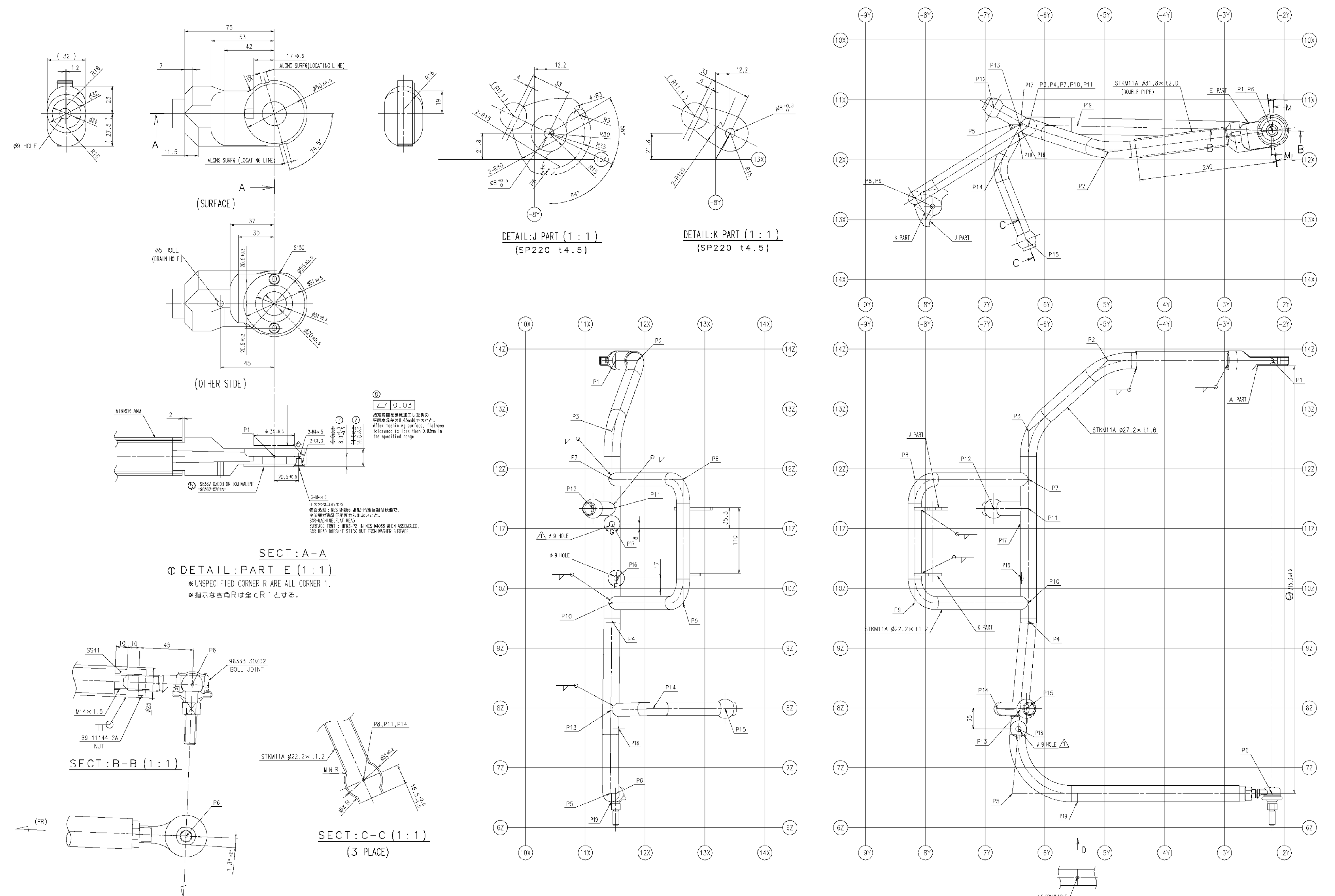


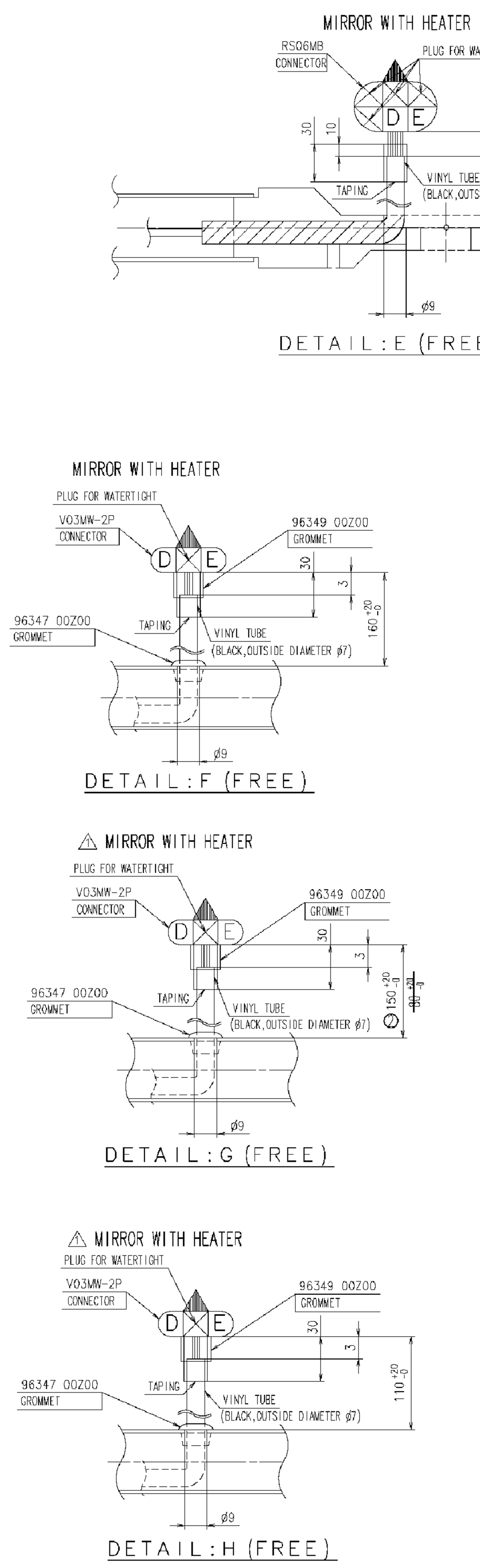


HARNESS SPECIFICATION

| | CIRCUIT NUMBER | DIAMETER OF WIRE | WIRE COLOR |
|---|---|---|---|
| D | 69-02 | AVS0.5 | R |
| E | 69-92 | AVS0.5 | B |

HARNESS INSTRUCTION DRAWING

DIMENSION TABLE: MAIN ARM (STKM11A φ27.2 t1.6)

| No. | POINT | COORDINATES X | COORDINATES Y | COORDINATES Z | BEND R |
|---|---|---|---|---|---|
| 1 | P1 | 1151.0 | -220.2 | 1381.0 | 0.0 |
| 2 | P2 | 1187.4 | -494.8 | 1381.0 | 90.0 |
| 3 | P3 | 1144.5 | -627.7 | 1262.3 | 90.0 |
| 4 | P4 | 1144.5 | -627.7 | 945.8 | 90.0 |
| 5 | P5 | 1141.1 | -654.5 | 656.8 | 90.0 |
| 6 | P6 | 1151.0 | -220.2 | 656.8 | 0.0 |

DIMENSION TABLE: SUB ARM (STKM11A φ22.2 t1.2)

| No. | POINT | COORDINATES X | COORDINATES Y | COORDINATES Z | BEND R |
|---|---|---|---|---|---|
| 7 | P7 | 1144.5 | -627.7 | 1182.3 | 0.0 |
| 8 | P8 | 1263.7 | -817.5 | 1182.3 | 40.0 |
| 9 | P9 | 1263.7 | -817.5 | 975.8 | 40.0 |
| 10 | P10 | 1144.5 | -627.7 | 975.8 | 0.0 |

DIMENSION TABLE: SUB ARM (STKM11A φ22.2 t1.2)

| No. | POINT | COORDINATES X | COORDINATES Y | COORDINATES Z | BEND R |
|---|---|---|---|---|---|
| 11 | P11 | 1144.5 | -627.7 | 1133.4 | 0.0 |
| 12 | P12 | 1112.8 | -685.6 | 1133.4 | 0.0 |

DIMENSION TABLE: SUB ARM (STKM11A φ22.2 t1.2)

| No. | POINT | COORDINATES X | COORDINATES Y | COORDINATES Z | BEND R |
|---|---|---|---|---|---|
| 13 | P13 | 1142.7 | -641.6 | 796.2 | 0.0 |
| 14 | P14 | 1213.3 | -679.2 | 798.9 | 50.0 |
| 15 | P15 | 1333.6 | -631.2 | 1108.0 | 0.0 |

DIMENSION TABLE: MAIN ARM (STKM11A φ27.2 t1.6)

| No. | POINT | COORDINATES X | COORDINATES Y | COORDINATES Z | HOLE SIZE |
|---|---|---|---|---|---|
| 16 | P16 | 1151.7 | -639.2 | 1017.0 | φ9.0 |
| 17 | P17 | 1144.5 | -641.3 | 1108.0 | φ9.0 |
| 18 | P18 | 1156.0 | -644.5 | 765.0 | φ9.0 |
| 19 | P19 | 1143.6 | -545.8 | 643.2 | φ5.0 |

COORDINATE VALUE OF EACH POINT

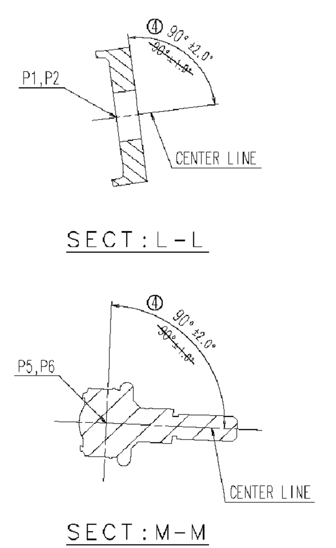


注記

1．本図は、ARM ASSY-LHの製品図である。

2．適用法規：実車取付状態で下記の仕向地の法規を満足すること。

| 部品番号 | 国内 | AST/NZE | PRC | GCC | 一般 | SAF | TWN | HKG | SIN |
|---|---|---|---|---|---|---|---|---|---|
| 96313 0Z32A | ○ | | | | | | | | |
| 96313 0Z32B | ○ | | | | | | | | |

法規：保安基準 第44条 後写鏡等 による。

3．表面処理
色調：AGD1（艶あり）
塗装：塗装は下記のいずれかを行い要求性能を満足すること。
①リン酸亜鉛系化成処理後カチオン電着塗装（膜厚は一般塗装面にて18μ以上のこと）
＋指定色上塗り塗装（膜厚は一般塗装面にて25μ以上のこと）とする。
②粉体塗装（膜厚は一般塗装面にて60μ以上のこと）
③色調は事前に担当設計及び造形部署と調整のうえ限度見本を提出のこと。

4．内部塗装
メインアーム内部に水浸入する孔等がある場合は下記のいずれかを行い要求性能を満足すること。
①パイプ内部カチオン電着塗装（18μ以上のこと）をおこなう。
②全て内部塗装できない場合は水浸入孔（ハーネス用の孔等）より下側のみ
カチオン電着塗装（18μ以上）をおこなう。
③水浸入孔等はシーリング処理する。
④シーリング材、工法、見栄え、内部塗装範囲等は、事前に担当設計部署と調整のうえ決定のこと。

5．溶接部は塗装前に、酸洗いをおこない酸化被膜を確実に除去すること。また、酸洗いで除去できない
スパッタ、スラグ等は、ワイヤブラシ等で確実に除去すること。

6．要求性能
①防錆性能：・NES M0140塩水噴霧試験を800Hr行い試験終了後の塗膜ふくれ、
さび（赤さび）等の外観さび発生状態は下記基準を満足すること。
・溶接部も含め塗装面の塗膜ふくれ、さび（赤さび）の発生なきこと。
②熱サイクル試験：NES M0132第2法A類を行い、試験終了後、外観異常なきこと。

7．図中指示寸法の、寸法許容差は下記表による。
またパイプ径、板厚の寸法許容差は JIS G3445による。

| 呼び寸法区分 | | | | 寸法許容差 | 角R許容差 |
|---|---|---|---|---|---|
| | 5以下 | | | ±0.15 | ±0.5 |
| 5 | < | ≦ | 45 | ±0.2 | ±1.0 |
| 45 | < | ≦ | 100 | ±0.5 | ±5.0 |
| 100 | < | ≦ | 350 | ±1.0 | ±10.0 |
| 350 | < | ≦ | 800 | ±2.0 | ±30.0 |
| 800 | < | ≦ | 2000 | ±3.0 | ±50.0 |

8．本部品の材質は、NES M0301（特定物質の使用に関する制限）を満足すること。

9．各部に有害なバリ、エッジ等なきこと。

10．メーカーは提案図を提出すること。

11．ボールジョイント締付時のナット締め付けトルクは2.6kgf・m以上とする。

12．ARM ASSY状態において、以下高圧洗車試験を行い、孔、グロメットの隙間等から
パイプ内への水浸入の無きこと。
水量：1500ℓ/h、吐出圧：7.85MPa[80Kg/cm²]
放水距離：1m、移動速度：1m/10sec

NOTE

1．THIS IS THE SPEC DRAWING FOR ARM-MIRROR.

2．REGULATION: SATISFY REGULATION OF THE FOLLOWING ACT PLACE IN A VEHICLE INSTALLATION STATE.

| PART NO. | JPN | AST/NZE | PRC | GCC | EXP | SAF | TWN | HKG | SIN |
|---|---|---|---|---|---|---|---|---|---|
| 96313 0Z32A | ○ | | | | | | | | |
| 96313 0Z32B | ○ | | | | | | | | |

THE REGULATION:DEPENDS ON THE NO. 44(REARVIEW MIRROR) IN JAPANESE SAFETY REGULATIONS FOR ROAD VEHICLES.

3．SURFACE TREATMENT
COLOR SPEC: AGD1(WITH LUSTER))
COATING SPEC: THE COATING PERFORMS FOLLOWING EITHER, AND SATISFY REQUIRED PERFORMANCE.
①APPLY CATION ED COATING FOR SURFACE TREATMENT AFTER ZINC PHOSPHATE TREATMENT.
+ A DESIGNATED COLOR AND FINISH IT WITH A COAT OF IT.
(COATING THICKNESS SHALL BE EXCEED 25μm ON GENERALLY PAINTED SURFACE.)
②POWDER COATING. (COATING THICKNESS SHALL BE EXCEED 60μm ON GENERALLY PAINTED SURFACE.)
③THE COLOR IS PRESENTATION BY A LIMIT SAMPLE AFTER A CHARGE DESIGN AND A MOLDING POST AND ADJUSTMENT BEFOREHAND.

4．THE INSIDE PAINTING
WHEN THERE ARE THE APERTURES WHERE WATER INVADES IN THE MAIN ARM INSIDE,
I PERFORM FOLLOWING EITHER, AND SATISFY DEMAND PERFORMANCE.
①I PERFORM THE PIPE INSIDE CATION ED COATING (I DO THINGS MORE THAN 18μm).
②ONLY BOTTOM PERFORMS THE CATION ED COATING (MORE THAN 18μm)ENTIRELY
FROM A WATER INVASION APERTURE (APERTURES FOR HARNESS) WHEN I CANNOT PAINT THE INSIDE.
③THE WATER INVASION TREATMENT SEALING.
④SEALING MATERIALS, MANUFACTURING METHOD, APPEARANCE, THE INSIDE PAINTING AREA ARE DECISION AFTER A CHARGE DESIGN POST AND ADJUSTMENT BEFOREHAND.

5．WELDING POINT SURELY REMOVE OXIDE COATING BY ACID PICKLING.
SPATTER, SLAG THAT CANNOT REMOVE BY ACID PICKLING SURELY REMOVE BY WIRE BRUSH ETC.

6．REQUIRED PERFORMANCE
① RUST-PROOF TREATMENT;
・NES M0140 SALT SPRAY TEST 800Hr. AFTER THE TEST BREAKS, BLISTERS AND RUSTED (RED RUST) SHALL SATISFY THE FOLLOWING STANDARD.
・A THING WITHOUT THE OUTBREAK OF I INCLUDE THE WELD, AND THE COATING OF THE PAINTWORK BLISTERS, AND BEING RUSTED (RED RUST).
② HEAT CYCLE TEST;
・PERFORM NES M0132 2ND-A METHOD. AFTER THE EXAMINATION END, THE APPEARANCE ABNORMALITY DOES A THING.

7．THE DIMENSIONAL TOLERANCE IN INDICATION DIMENSION DEPENDS ON THE FOLLOWING FACE.
IN ADDITION, PIPE DIAMETER, THE DIMENSIONAL TOLERANCE OF THE PLATE THICKNESS DEPEND ON JIS G3445.

| NOMANAL SIZE DIVISION | | | | DIMENSIONAL TOL | CORNER R TOL |
|---|---|---|---|---|---|
| | LESS THAN 5 | | | ±0.15 | ±0.5 |
| 5 | < | ≦ | 45 | ±0.2 | ±1.0 |
| 45 | < | ≦ | 100 | ±0.5 | ±5.0 |
| 100 | < | ≦ | 350 | ±1.0 | ±10.0 |
| 350 | < | ≦ | 800 | ±2.0 | ±30.0 |
| 800 | < | ≦ | 2000 | ±3.0 | ±50.0 |

8．THE MATERIALS MUST CONFORM WITH NES M0301(SUBSTANCE USE RESTRICTIONS).

9．THERE SHALL BE NO HARMFUL BURRS EDGES.

10．THE MANUFACTURER SHALL SUBMIT THE PROPOSAL DRAWING.

11．THE NUT TIGHTENING TORQUE WITH THE BALL JOINT IS ASSUMED TO BE MORE THAN 2.6kgf・m.

12．THE FOLLOWING HIGH-PRESSURE CARWASH EXAMINATIONS MUST BE DONE IN THE ARM ASSY STATE,
AND WATER MUST NOT INVADE FROM THE SPACE BETWEEN
THE HOLE AND THE GROMMET IN THE PIPE.
QUANTITY OF WATER:1500L/h,DISCHARGE PRESSURE:7.85MPa[80Kg/cm²]
DISTANCE OF DRAINING WATER OFF:1m,MOVEMENT SPEED:1m/10sec

| SIGN 承認 | DATE 日付 | CHG.NO.NOTE.NO. 変更通知番号 | SYM 記号 | ALTERATION 図面変更記事 | SIGN 担当 |
|---|---|---|---|---|---|
| KUROKAWA | 140711 | 4 D-15904-29 | ⑨ | 部品番号変更 CHANGE PART NUMBER | SUNADA |
| | | | ⑧ | 平面度公差指示追加 ADD FLATNESS TOLERANCE | |
| | | | ⑦ | 寸法修正 CORRECT THE DIMENSION | |
| KUROKAWA | 140328 | 3 D-15827-71 | ⑥ | 部品番号変更 CHANGE PART NUMBER | SUNADA |
| | | | ⑤ | 構成部品変更 CHANGE PART NUMBER | |
| KUROKAWA | 131218 | 2 D-15724-21 | ④ | 寸法公差変更 (±1.0° → ±2.0°) CHANGE THE TOLERANCE | T.SUNADA |
| | | | ③ | 寸法追加 ADD DIMENSION | |
| | | | ② | ハーネス長さ変更 (60 → 150) CHANGE LENGTH OF HARNESS | |
| KUROKAWA | 130412 | 1 Q0-8541 | ① | PART E 形状変更 CHANGE FORM OF PART E | T.SUNADA |
| | 120711 | Q0-7697 | N | | |

| | SPECIFICATION 仕様 | APPLICATION △有り | MASS 質量 | MATERIAL 材料 | PART NAME 部品名称 | PART NO. 部品番号 | NO. 記番 |
|---|---|---|---|---|---|---|---|
| ⑨ | HEATER MIRROR×3 | △ | 3,000 | ASSY | ARM-MIRROR LH | 96313 0Z36B | 6 |
| ⑨ | HEATER MIRROR×1 | | 3,000 | ASSY | ARM-MIRROR LH | 96313 0Z36A | 5 |
| ⑨⑥ | ~~HEATER MIRROR×3~~ | △ | ~~3,000~~ | ~~ASSY~~ | ~~ARM-MIRROR LH~~ | ~~96313 0Z33E~~ | 4 |
| ⑨⑥ | ~~HEATER MIRROR×1~~ | | ~~3,000~~ | ~~ASSY~~ | ~~ARM-MIRROR LH~~ | ~~96313 0Z33D~~ | 3 |
| ⑥ | ~~HEATER MIRROR×3~~ | △ | ~~3,100~~ | ~~ASSY~~ | ~~ARM-MIRROR LH~~ | ~~96313 0Z32B~~ | 2 |
| ⑥ | ~~HEATER MIRROR×1~~ | | ~~3,100~~ | ~~ASSY~~ | ~~ARM-MIRROR LH~~ | ~~96313 0Z32A~~ | 1 |

| DIFFERENCE 相違 | THIRD ANGLE PROJ 三角法 | SCALE 尺度 1:2 | DRAWN BY 製図 | DESIGNED BY 設計 M.OKA | CHECKED BY 調査 T.SUNADA | APPROVED BY 承認 I.KUROKAWA K.SHIMURA |
|---|---|---|---|---|---|---|

DRAWING NAME 図面名称: ARM-MIRROR LH
DRAWING NO. 図面番号: 96313 0Z32A
UD Trucks Corporation UDトラックス株式会社
SIZE 1.5A
CHG. 04
重保区分
図面種別 P9210
(SOLID)

DRAWING NAME 図面名称: ARM-MIRROR LH
DRAWING NO. 図面番号: 96313 0Z32A
UD Trucks Corporation UDトラックス株式会社 CHG. 04 B

UPDATED UD TRUCKS LEGACY DRAWING


The copying, distribution and utilization of this document as well as the communication of its contents to others without expressed authorization is prohibited. Offenders will be held liable for payment of damages. All rights reserved in the event of the grant of a patent, utility model or ornamental design registration.


VOLVO
Group Trucks Technology

Document title: ARM MIRROR LEFT
Document type
The legal owner of this document is stated under "Design Location" in KOLA and in the associated "Part Version Report"
Document No: 22289932
Issue: 04
1/1
A0 FORM